Work Order ID 73087

Thursday, August 25, 2011 1:25:49 PM

Item ID: D3297-1-0098 **Accept** **Setup Start**

Revision ID:

Item Name: HOSE ASS'Y **Stop**

Start Date: 8/25/2011 **Start Qty:** 4.00 **Cust Item ID:**

Required Date: 9/5/2011 **Req'd Qty:** 4.00 **Customer:**

Reference:

Approvals: **Process Plan:** MF **Date:** 11-08-25 **Tooling:** **Date:** **Run Start**

QC: **Date:** **SPC (Y/N):** **Date:** **Stop**

Sequence ID/ Work Center ID	Operation Description	Set Up/ Run Hours	Tool ID	Tool #	Plan Code	Accept Qty	Reject Qty	Reject Number	Insp. Stamp
Draw Nbr	**Revision Nbr**								
D3297	Rev D								
100	PURCHASING	0.00							
Purchasing									
Purchasing	**Memo**	0.00							
	Create D2729-1 label and include with W/O Issue P/O: 14747 Hose Assembly as per Dwg D3297 Possible Supplier: API Material release note is required								
110	Receive & Inspect for Damage & Mat'l Certs	0.00							
Packaging									
Packaging	**Memo**	0.00							
	Ensure Material Release Note is attached								

CZ 11/08/25 (4)

11/8/31 (4)

Dart Aerospace Ltd

W/O:		WORK ORDER CHANGES					
DATE	STEP	PROCEDURE CHANGE	By	Date	Qty	Approval Chief Eng / Prod Mgr	Approval QC Inspector

Part No: _____ **PAR #:** _____ **Fault Category:** _____ **NCR:** Yes No **DQA:** _____ **Date:** _____

Resolution: _____ **Disposition:** _____ **QA: N/C Closed:** _____ **Date:** _____

NCR:		WORK ORDER NON-CONFORMANCE (NCR)						
DATE	STEP	Description of NC Section A	Corrective Action Section B			Verification Section C	Approval Chief Eng	Approval QC Inspector
			Initial Chief Eng	Action Description Chief Eng	Sign & Date			

NOTE: Date & initial all entries

H:\fFORMS\Quality Assurance\approved QA\NCRWO RevE

Work Order ID 73087

Thursday, August 25, 2011 1:25:49 PM

Item ID: D3297-1-0098 **Accept** **Setup Start**

Revision ID: **Stop**

Item Name: HOSE ASS'Y

Start Date: 8/25/2011 **Start Qty:** 4.00 **Cust Item ID:**

Required Date: 9/5/2011 **Req'd Qty:** 4.00 **Customer:**

Reference:

Approvals: **Process Plan:** _____ **Date:** _____ **Tooling:** _____ **Date:** _____ **Run Start**

QC: _____ **Date:** _____ **SPC (Y/N):** _____ **Date:** _____ **Stop**

Sequence ID/ Work Center ID	Operation Description	Set Up/ Run Hours	Tool ID	Tool #	Plan Code	Accept Qty	Reject Qty	Reject Number	Insp. Stamp
120	QC6- Inspect dimensions to drawing	0.00							
QC									
Quality Control	**Memo**	0.00				(x4)			
130		0.00							
Small Fab	Small Fab								
Small Fab	**Memo** Install D2729-1 as per Dwg D3297 using D2182-045 Heat Shrink Batch: B21864	0.00				11/09/01	(4)		
140	Identify as per dwg & Stock Location: 194	0.00							
Packaging									
Packaging	**Memo**	0.00				11/9/2	(4)		

Dart Aerospace Ltd

W/O:		WORK ORDER CHANGES					
DATE	STEP	PROCEDURE CHANGE	By	Date	Qty	Approval Chief Eng / Prod Mgr	Approval QC Inspector

Part No: _____ **PAR #:** _____ **Fault Category:** _____ **NCR:** Yes No **DQA:** _____ **Date:** _____

Resolution: _____ **Disposition:** _____ **QA: N/C Closed:** _____ **Date:** _____

NCR:		WORK ORDER NON-CONFORMANCE (NCR)						
DATE	STEP	Description of NC Section A	Corrective Action Section B			Verification Section C	Approval Chief Eng	Approval QC Inspector
			Initial Chief Eng	Action Description Chief Eng	Sign & Date			

NOTE: Date & initial all entries

H:\fFORMS\Quality Assurance\approved QA\NCRWO RevE

Work Order ID 73087

Thursday, August 25, 2011 1:25:49 PM

Item ID: D3297-1-0098 **Accept** **Setup Start**

Revision ID: **Stop**

Item Name: HOSE ASS'Y

Start Date: 8/25/2011 **Start Qty:** 4.00 **Cust Item ID:**

Required Date: 9/5/2011 **Req'd Qty:** 4.00 **Customer:**

Reference:

Approvals: **Process Plan:** _____ **Date:** _____ **Tooling:** _____ **Date:** _____ **Run Start**

QC: _____ **Date:** _____ **SPC (Y/N):** _____ **Date:** _____ **Stop**

Sequence ID/ Work Center ID	Operation Description	Set Up/ Run Hours	Tool ID	Tool #	Plan Code	Accept Qty	Reject Qty	Reject Number	Insp. Stamp
150	QC21- Final Inspection - Work Order Release	0.00					n/a		
QC Quality Control	Memo	0.00							

MF
11-09-06

Dart Aerospace Ltd

W/O:		WORK ORDER CHANGES					
DATE	STEP	PROCEDURE CHANGE	By	Date	Qty	Approval Chief Eng / Prod Mgr	Approval QC Inspector

Part No: _____ **PAR #:** _____ **Fault Category:** _____ **NCR:** Yes No **DQA:** _____ **Date:** _____

Resolution: _____ **Disposition:** _____ **QA: N/C Closed:** _____ **Date:** _____

NCR:		WORK ORDER NON-CONFORMANCE (NCR)						
DATE	STEP	Description of NC Section A	Corrective Action Section B			Verification Section C	Approval Chief Eng	Approval QC Inspector
			Initial Chief Eng	Action Description Chief Eng	Sign & Date			

NOTE: Date & initial all entries

H:\fFORMS\Quality Assurance\approved QA\NCRWO RevE

Picklist Print

Thursday, August 25, 2011 1:25:46 PM

Work Order ID: 73087

Parent Item: D3297-1-0098

Parent Item Name: HOSE ASS'Y

Start Date: 8/25/2011 **Required Date:** 9/5/2011

Start Qty: 4.00 **Required Qty:** 4.00

Comments: IPP: B□04.11.09□Added Step 5□KJ/JLM□

Component Item ID/ Item Name	Replacement Item ID	Mfg/ Purch	Bin Item	Primary Location	Last Location	Route Seq ID	Unit of Measure	Qty on Hand	Qty per Kit	Total Qty	Qty Issued	Date Issued	Status
156001-6D0096 HOSE ASS'Y		Purchased	No			110	Each	0.0000	1	4			
D2182-045 Heat Shrink 4.5" Long		Manufactured	No			130	Each	0.0000	1	4			
D2729-1 Dart Logo label		Manufactured	No			130	Each	0.0000	1	4			

B21864

Dart Aerospace Ltd

W/O:		WORK ORDER CHANGES					
DATE	STEP	PROCEDURE CHANGE	By	Date	Qty	Approval Chief Eng / Prod Mgr	Approval QC Inspector

Part No: _____ **PAR #:** _____ **Fault Category:** _____ **NCR:** Yes No **DQA:** _____ **Date:** _____

Resolution: _____ **Disposition:** _____ **QA: N/C Closed:** _____ **Date:** _____

NCR:		WORK ORDER NON-CONFORMANCE (NCR)						
DATE	STEP	Description of NC Section A	Corrective Action Section B			Verification Section C	Approval Chief Eng	Approval QC Inspector
			Initial Chief Eng	Action Description Chief Eng	Sign & Date			

NOTE: Date & initial all entries

H:\fFORMS\Quality Assurance\approved QA\NCRWO RevE

DESIGN	DRAWN BY	DART AEROSPACE LTD HAWKESBURY, ONTARIO, CANADA	
CHECKED	APPROVED	DRAWING NO. D3297	REV. D SHEET 1 OF 1
DATE 05.01.21		TITLE HOSE ASSEMBLIES	SCALE NTS

A	04.07.06	NEW ISSUE
B	04.11.01	STRATOFLEX P/N WAS AEROQUIP P/N
C	04.11.18	T50 CORRECTED TO TSO
D	05.01.21	CORRECT STRATOFLEX P/N

RELEASED
05.01.21

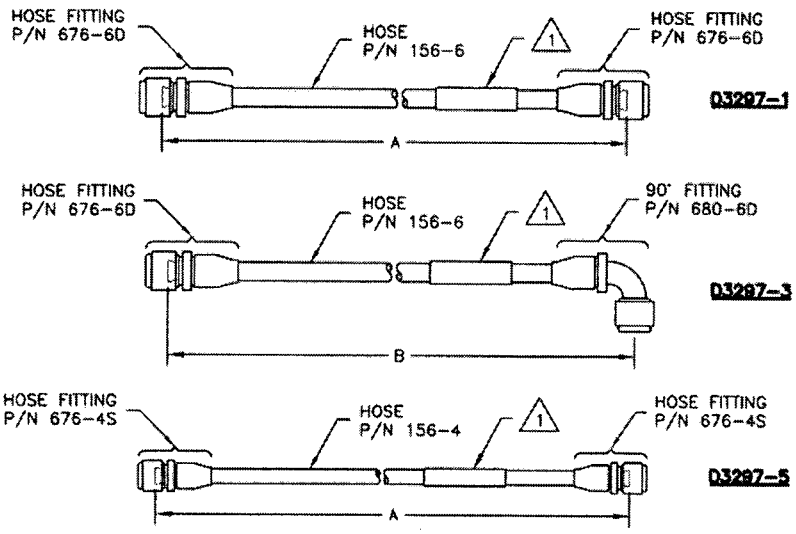

#73087

HOSE SPECIFICATION				
DART P/N	STRATOFLEX P/N	VENDOR	A	B
D3297-1-0098	156001-6D0096	API	9.75	
D3297-1-0130	156001-6D0130	API	13.00	
D3297-1-0121	156001-6D0121	API	12.13	
D3297-3-0085	156005-6D0085	API		8.50
D3297-3-0210	156005-6D0210	API		21.00
D3297-3-0350	156005-6D0350	API		35.00
D3297-5-0410	156001-4S0410	API	41.00	

D3297-1-XXXX HOSE ASSEMBLY
D3297-3-XXXX HOSE ASSEMBLY
D3297-5-XXXX HOSE ASSEMBLY
} WHERE XXXX REPRESENTS HOSE LENGTH IN TENTHS OF INCH

EG: 12.125" LONG: D3297-1-0121
41.00" LONG: D3297-5-0410
8.50" LONG: D3297-3-0085

NOTES:
1) IDENTIFY WITH DART P/N & B/N USING D2729-1 LABEL INSTALLED WITH D2182-045 HEAT SHRINK
2) TOLERANCES ARE PER DART QSI 018 UNLESS OTHERWISE NOTED
3) ALL DIMENSIONS ARE IN INCHES
4) HOSE ASSEMBLIES TO MEET THE REQUIREMENTS OF TSO-C53a TYPE "A"

Dart Aerospace Ltd

W/O:		WORK ORDER CHANGES					
DATE	STEP	PROCEDURE CHANGE	By	Date	Qty	Approval Chief Eng / Prod Mgr	Approval QC Inspector

Part No: _____ **PAR #:** _____ **Fault Category:** _____ **NCR:** Yes No **DQA:** _____ **Date:** _____

Resolution: _____ **Disposition:** _____ **QA: N/C Closed:** _____ **Date:** _____

NCR:		WORK ORDER NON-CONFORMANCE (NCR)						
DATE	STEP	Description of NC Section A	Corrective Action Section B			Verification Section C	Approval Chief Eng	Approval QC Inspector
			Initial Chief Eng	Action Description Chief Eng	Sign & Date			

NOTE: Date & initial all entries

Dart Aerospace Ltd.
1270 Aberdeen Street
Hawkesbury, ON K6A 1K7
Tel: 613 632 9577
Fax: 613 632 1053

*****PO REPRINT*****

Purchase Order ID PO14747

Purchase Order Date 8/25/2011
PO Print Date 8/26/2011

Order From : VC-AER002

AEROSPACE PRODUCTS INTERNATIONAL
P.O. BOX 223, STATION M
CALGARY, AB T2P 2H6
CA

Contact Name		**Buyer**	Chantal Lavoie
Vendor Phone	800 214 7404	**Requisition Nbr**	
Vendor Fax	800 214 8875	**Tax Resale Nbr**	10127-2607
Vendor Account Nbr		**Terms**	Net 30
		Currency	CAD
		FOB	Destination-Collect

RFI (SEI)

Ship To : DART AEROSPACE LTD 1270 ABERDEEN
HAWKESBURY, ON K6A 1K7
CANADA

Line Nbr	Reference / Revision ID / Vendor Part Number	Description/ Mfg ID	Req Date/ Taxable	Req. Qty/ Unit of Measure	Ship Method	Unit Price	Extended Price
1	156005-6D0085	HOSE ASS'Y	8/31/2011 Yes	4.00 Each	FedEx PI collect	$99.3700	$397.48
		Special Inst:	AS PER DWG D3297 REV. D B73088				
2	156001-6D0096	HOSE ASS'Y	8/31/2011 Yes	4.00 Each	FedEx PI collect	$60.1900	$240.76
		Special Inst:	AS PER DWG D3297 REV. D 73087				
3	156005-6D0210	HOSE ASS'Y	8/31/2011 Yes	4.00 Each	FedEx PI collect	$114.4300	$457.72
		Special Inst:	AS PER DWG D3297 REV. D B73089				

CERTIFICATE OF CONFORMITY REQ'D UPON DELIVERY

PO Total: **$1,095.96**

No substitution or deviation without consent.
Certificate of Conformity or Material Certification required when applicable

Change Nbr: 2 **Change Date:** 8/26/2011

API
AEROSPACE PRODUCTS INTERNATIONAL

API
2461 46th Ave.
LACHINE QC H8T 3C9
CANADA

08/30/2011 16:06:18

Pack List

Shipping Address
DART AEROSPACE LTD.
1270 ABERDEEN STREET
HAWKESBURY ON K6A 1K7
CANADA

Forwarding Agent's Address

Shipping Instructions
Detailed Shipping Instructions at the end of the document

Packing Instructions
Detailed Packing Instructions at the end of the document

Information

Document Number	80924788
Document Date	08/30/2011
Purchase Order No.	PO14747
Purchase Order Date	08/25/2011
Sales Order Number	821655
Sales Order Date	08/25/2011
Customer Number	6100481
Shipping Conditions	FXPri 1D (Intl 1-3D)
Incoterms	
Cust Ship Acct	
Delivery Date	08/31/2011
Bill of Lading	
Total Volume	0.012 IN3
Carrier	PUROLATOR COURIER

Item	Material	Material Description	Quantity	Weight	Batch Num
10	156005-6D-0085	156-6 HOSE ASSEMBLY			
	Batches				
	0002121336 (PO:4500159307)		4 EA	0 LB	
20	156001-6D-0096	156-6 HOSE ASSEMBLY			
	Batches				
	0002121335 (PO:4500159307)		4 EA	0 LB	
30	156005-6D-0210	156-6 HOSE ASSEMBLY			
	Batches				
	0002121337 (PO:4500159307)		4 EA	0 LB	

8 11/09/01

Shipping and Packing Instructions

CERTIFICATE OF CONFORMANCE

I hereby certify that th eaircraft parts described hereon were acquired from a source of supply that is consistent with the conditions under which Transport Canada distributor approval number 77-98 has been granted.

Authorized Signature RW

AO # 77-98
API # 11

API Technologies

Certificate of Conformance

Customer **API MONTREAL**
Sales Order# 4500159307 PO# ____ Date 08/26/2011

Part#	Qty
156001-6D-0096 Su 4/09/01	4
156005-6D-0085	4
156005-6D-0210	4

We hereby certify that all the above parts, including all materials, have been manufactured, tested, inspected and packed in conformance with all of the requirements of your order and the applicable government specifications & standards. Records of tests, inspection and certification indicating the above conformance are on file at Aerospace Products International and are available for your examination.

It is further certified that on any hose assemblies marked with a TSO, parts and/or materials reflected therein were produced under Federal Aviation Administration approved manufacturing quality control systems/methods as set forth in the FAA issued technical standard order authorized (TSOA) issued to Stratoflex and (b) such parts and/or material are new and are in condition for safe operation.

If applicable, satisfactory compliance with the conditions and test required for TSO approval indicates the hose assembly has met the minimum performance standards as stated in the TSO. Furthermore, it is the responsibility of the installer to determine the installation eligibility and that it will not cause the hose assembly to be subjected to conditions in excess of those for which it has been approved.

For API _____